A81.07.V9.69

HOB SET

[AVAILABLE WITH FLOW CONTROL, ADD **.FC** TO END OF CODE - 6 STAR/3.5Lpm WELS RATING]

STANDARD WITH INDENT HANDLE
OTHER LEVER HANDLE OPTIONS

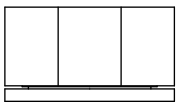

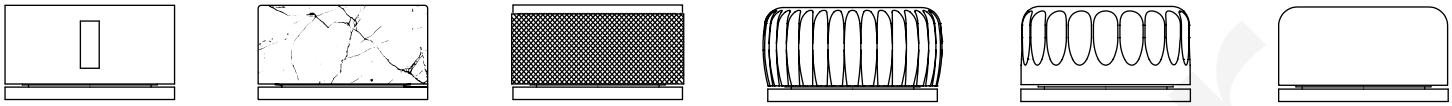

.V2 PIN HANDLE **.V3** WHITE CARRARA MARBLE **.V4** BLACK MARQUINA MARBLE **.V5** KNURLED **.V6** REEDED **.V7** FLUTED **.V8** ROUND DIAL

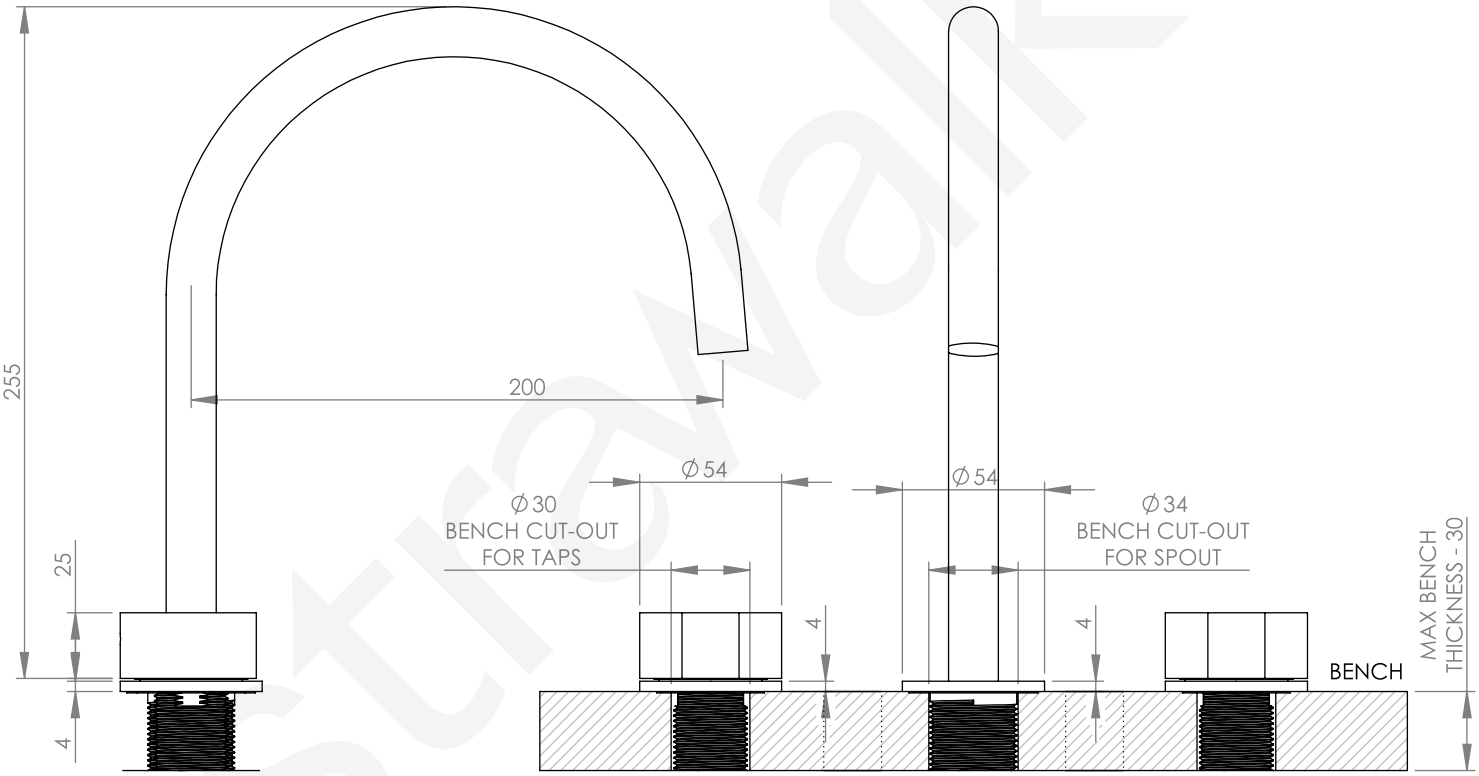

G 1/2" MALE
SPOUT BASE

astrawalker™