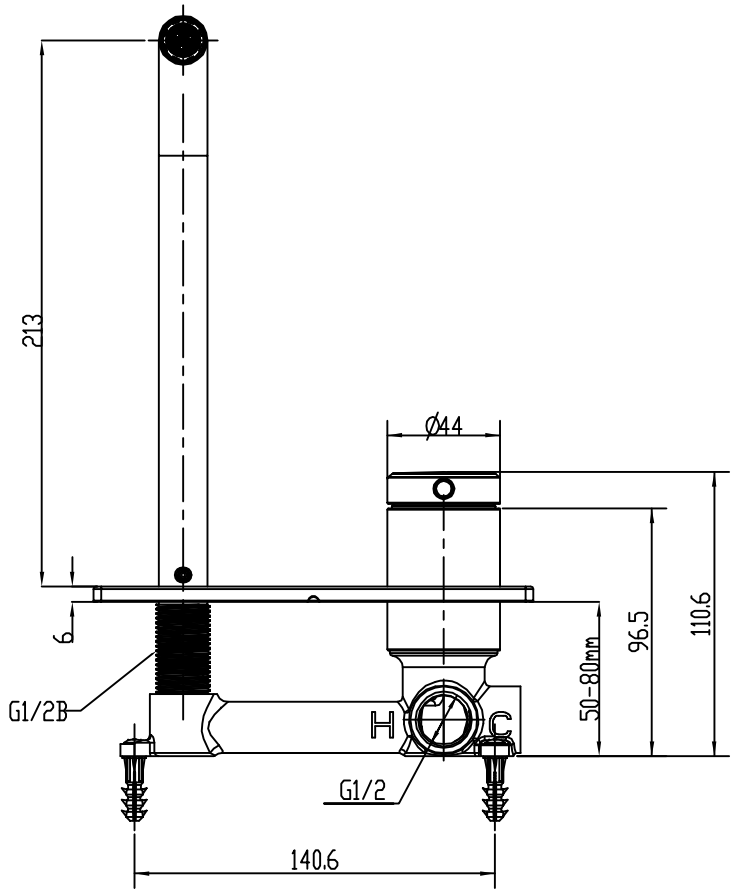
213
Ø44
6
G1/2B
H
C
50-80mm
96.5
110.6
G1/2
140.6

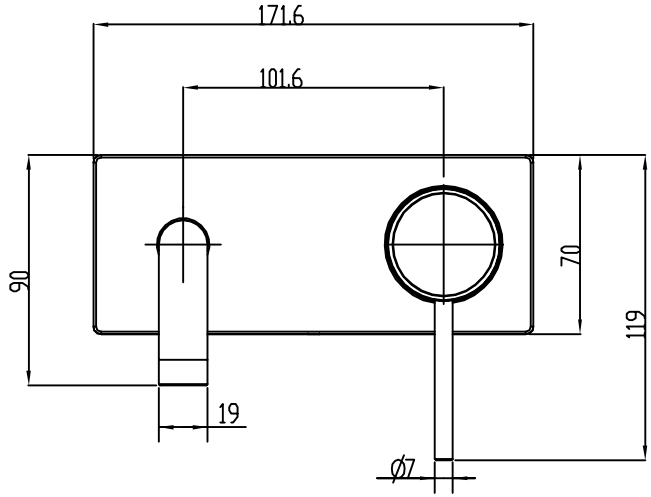
171.6
101.6
90
70
119
19
Ø7