STUDIO BAGNO

MADE IN ITALY

3MM PENCIL LINE EDGE

FINISHED BY HAND

10 YEARS WARRANTY

FALL 60

STYLE

Undercounter

CODE

FALL60

COLOURS

Gloss White

WEIGHT

9.5kg

OVERFLOW & WASTE

32 mm non-overflow plug & waste not included

RECOMMENDED PLUG & WASTE

SBW006

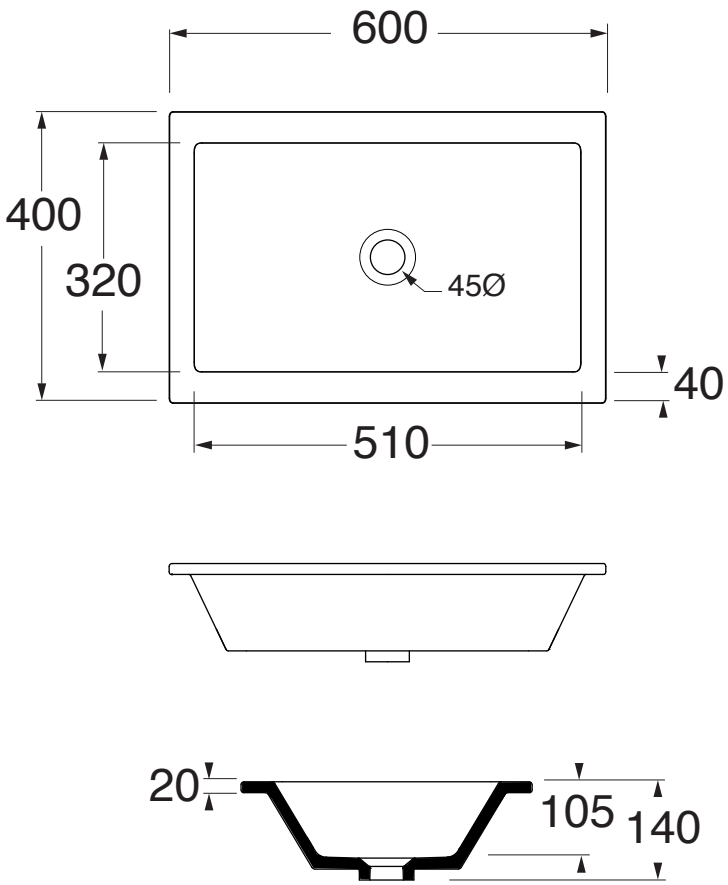

Note: All dimensions are in millimetres and are subject to normal manufacturing variances.
Studio Bagno Pty Ltd reserves the right to vary specifications at any time without notice. Date created: 25/06/2021